FRAMMENTO GM SHWR PK

FRAMMENTO Shower Range
Frammento Gun Metal Grey
Concealed Dual Control Shower Pack

Specification

Finish/Colour:	Gun Metal Grey
Main Construction Material:	Brass; ABS
No of Controls:	2
Shower Type:	Dual Control
Shower Head Type:	Fixed Head; Adjustable
Valve/Cartridge Type:	Thermostatic Cartridge & 3/4" Ceramic Disc Valve
Maximum Hot Water Supply Temperature °C:	65
Maximum Static Pressure: (bar)	10
Plumbing System Suitability:	Suitable for all plumbing systems
Maximum Dynamic Pressure (bar):	0.2
Maximum Static Pressure (bar):	5.0
Connection Inlet:	15mm Compression
Connection Outlet:	G 1/2"
Isolation Valve Included:	No
Check Valve Included:	Yes

Features:

- All in one box - pack includes shower valve with integral two outlet diverter, slimline 200mm round fixed head with shower arm, and shower kit with an adjustable riser rail plus a multi function handset and wall outlet.
- Rub clean handset and fixed head - limescale and debris build-up is quickly and easily removed by rubbing a finger or a cloth over the nozzles.
- On-trend Gun Metal Grey finish to make a statement in your bathroom.
- Slim design recessed shower valve will fit into a cavity space as small as 35mm for hassle-free installation.
- Dual control - Flow and temperature are operated separately giving accurate control of both.
- Cartridge can be accessed from the front for easy servicing.
- 15mm inlet connections.
- Fitting depth including plasterboard and tiles is 60mm - 75mm.
- 5-year parts and 1 year labour guarantee for peace of mind.
- Co-ordinating range of Bathroom taps available.

Dimensions (measurements in mm)

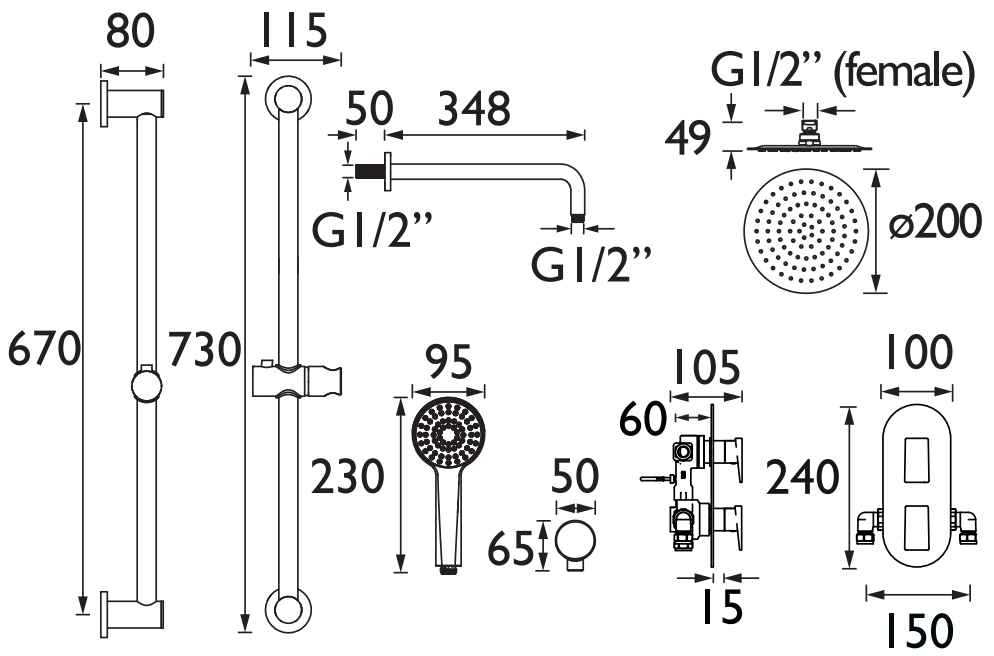

Product Certifications:

Unified Water Label 9.6 l/min

Flow Rates (l/min)

System Pressure (bar)	0.2	0.5	1	2	3	5
Through Handset (mixed)	2.3	4.2	6.4	8.4	9.6	10.4
Through Fixed Head (mixed)	3.5	6.1	7.9	9	9.2	9.3
Through Handset (without flow regulators)	2.9	5	7.5	11	13	17.4
Through Fixed Head (without flow regulators)	5.9	10.4	15.3	20.7	7.5	8.6

For more products, visit our website: http://www.bristan.com

TECHNICAL DATA SHEET

TOP QUALITY 5 YEARS GUARANTED *

BRISTAN

D1

Bristan, Birch Coppice Business Park, Dordon, Tamworth, B78 1SG. Web Site: www.bristan.com Telephone: 0330 026 6273. Email: enquire@bristan.com.

* **- Non-chrome product finishes carry a 3 year guarantee on finish.** See www.bristan.com/guarantees for more information. The information contained on this page was correct at date of issue. Fitting Dimensions are provided as a guide only. Some variation may occur due to manufacturing tolerances. Bristan pursues a policy of continuous improvement in design and performance of its products and so reserves the right to change specifications without prior notice.